United Metal Products®

Cel-Air®

Evaporative Cooling

• Single Inlet / Double Fan

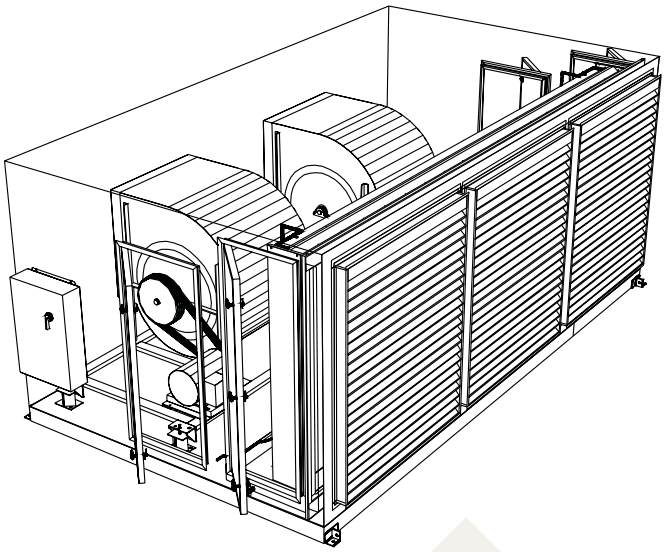

Hybralume™ Recycle by design

Single Inlet/Double Fan—Industrial Class Evaporative Cooling Equipment with Capacities of 54,000 CFM to 100,800 CFM and up to 1.5" ESP or higher if required

Why?

Cel-Air® units are high capacity, high efficiency evaporative cooling equipment. With 24 cataloged units and sizes ranging from 6,000 CFM to over 100,000 CFM, United Metal Products gives the engineer, contractor, or owner the choice and options they want.

Benefits:

- 24 cataloged sizes
- 2" double wall or single wall construction
- Galvanized, aluminum, stainless steel
- 6,000–100,000 CFM and above
- Evaporative cooling
- Forward curve, airfoil, or backward inclined wheels
- ETL labeling available
- Powder coated
- Stainless steel reservoir available

Applications:

- Aircraft hangars
- Clean room M.U.A.
- Data centers
- Food processing plants
- Gymnasiums
- Hospitals
- Kitchens
- Make up air requirement
- Manufacturing facilities
- Military bases
- Mining industry
- Municipalities
- Prisons
- Process cooling
- Schools
- Textile industries
- Turbine inlet cooling
- Waste water treatment facility
- Warehouses

Resources Available for This Product

- Catalog By Mail
- Catalog Online

United Metal Products
1920 E Encanto Drive Tempe, AZ 85281
T 480.968.9550
F 480.968.9555
www.unitedmetal.com

Manufacturer of Quality Air Moving Equipment

Information subject to change. Updates available online.
Cel//SIDF//PO//Rev. 2.2 4-13-10

MODEL # Air Volume	WITHOUT FILTERS / WITH FILTERS	SINGLE INLET / DOUBLE FAN - EXTERNAL STATIC PRESSURE ("WG)														Power Requirements (at 460/3/60) *	
		0.25 / 0.00		0.50 / 0.25		0.75 / 0.50		1.00 / 0.75		1.25 / 1.00		1.50 / 1.25		1.75 / 1.50		MCA	MOP
		FAN	HP	FAN	HP	FAN	HP	FAN	HP	FAN	HP	FAN	HP	FAN	HP	Amps	Amps
CEL-ODO-108 54,000 cfm	(2) DWDI FC	32	(2) 10	32	(2) 15	32	(2) 15	32	(2) 15	32	(2) 15	32	(2) 20	32	(2) 20	66	80
	(2) DWDI BI	36	(2) 10	36	(2) 10	36	(2) 15	36	(2) 15	36	(2) 15	36	(2) 15	36	(2) 15	52	60
	(2) DWDI AF							40	(2) 15	40	(2) 15	40	(2) 15	40	(2) 15	52	60
CEL-ODO-120 60,000 cfm	(2) DWDI FC	36	(2) 10	36	(2) 10	36	(2) 15	36	(2) 15	36	(2) 15	36	(2) 20	36	(2) 20	66	80
	(2) DWDI BI	40	(2) 10	40	(2) 10	40	(2) 15	40	(2) 15	40	(2) 15	40	(2) 15	40	(2) 20	66	80
	(2) DWDI AF									40	(2) 15	40	(2) 15	40	(2) 20	66	80
CEL-ODO-132 66,000 cfm	(2) DWDI FC	40	(2) 10	40	(2) 10	40	(2) 15	40	(2) 15							52	60
	(2) DWDI BI	40	(2) 10	40	(2) 15	40	(2) 15	40	(2) 15	40	(2) 15	40	(2) 20	40	(2) 20	66	80
	(2) DWDI AF													40	(2) 20	66	80
CEL-ODO-154 77,000 cfm	(2) DWDI FC	36	(2) 15	36	(2) 20	36	(2) 20	36	(2) 25	36	(2) 25	36	(2) 25			81	100
	(2) DWDI BI	40	(2) 15	40	(2) 15	40	(2) 20	40	(2) 20	40	(2) 20	40	(2) 25	40	(2) 25	81	100
	(2) DWDI AF	40	(2) 15	40	(2) 15	40	(2) 15	40	(2) 20	40	(2) 20	40	(2) 20	40	(2) 20	66	80
CEL-ODO-168 84,000 cfm	(2) DWDI FC	36	(2) 20	36	(2) 25	36	(2) 25	36	(2) 25	36	(2) 30	36	(2) 30	36	(2) 40	122	150
	(2) DWDI BI	44	(2) 15	44	(2) 15	44	(2) 20	44	(2) 20	44	(2) 20	44	(2) 25	44	(2) 25	81	100
	(2) DWDI AF	44	(2) 15	44	(2) 15	44	(2) 15	44	(2) 20	44	(2) 20	44	(2) 20	44	(2) 25	81	100
CEL-ODO-182 91,000 cfm	(2) DWDI FC	40	(2) 20	40	(2) 20	40	(2) 25	40	(2) 25	40	(2) 30	40	(2) 30	40	(2) 30	95	125
	(2) DWDI BI	44	(2) 15	44	(2) 20	44	(2) 20	44	(2) 20	44	(2) 25	44	(2) 25	44	(2) 30	95	125
	(2) DWDI AF					44	(2) 15	44	(2) 20	44	(2) 20	44	(2) 25	44	(2) 25	81	100
CEL-ODO-202 100,800 cfm	(2) DWDI FC	40	(2) 25	40	(2) 25	40	(2) 30	40	(2) 30	40	(2) 40	40	(2) 40	40	(2) 40	122	150
	(2) DWDI BI	49	(2) 15	49	(2) 20	49	(2) 20	49	(2) 25	49	(2) 25	49	(2) 25	49	(2) 30	95	125
	(2) DWDI AF	49	(2) 15	49	(2) 15	49	(2) 20	49	(2) 20	49	(2) 25	49	(2) 25	49	(2) 30	95	125

* Unit power requirements, dimensions and weights are given as a guide. They include down discharge AF fans and the largest motor HP shown. Motors are standard efficiency single speed ODP.
* Each unit houses (2) fans and (2) motors. Different fan or motor types, fan orientation or motor position will effect dimensions and weights. Full details will be given with any quotation.
* All these units can operate at higher static pressures with fan or motor changes. Please contact the factory with your requirements.
* Data is based on the maximum output of each unit size. Intermediate volumes will be achieved by reducing the fan speed.
* Data shown is based at sea level. HP and performance may be effected at high altitudes.
* The filter is an option. When adding filters, add the filter pressure drop to the unit ESP and use that total to select the motor HP.
* Please specify the fan discharge location (Up, Down or End) when ordering these units.

		SINGLE INLET / DOUBLE FAN EVAPORATIVE COOLER DIMENSIONS - See Drawing										WEIGHTS	
MODEL # Air Volume	FAN QTY & TYPE	WIDTH	HEIGHT	LENGTH	A "	B "	C "	D "	E1 "	E2 "	F "	With Clean Filters Ship lb	Operate lb
CEL-ODO-108 54,000 cfm	(2) DWDI FC	228	96	122	6	21.9	39.7	39.7	53.5	41.8	33.6	7,675	9,125
	(2) DWDI BI	228	96	129	6	24.1	44.5	44.5	46.0	46.9	35.9	8,050	9,475
	(2) DWDI AF	228	96	136	6	25.0	49.9	49.9	38.7	50.8	36.8	8,475	9,925
CEL-ODO-120 60,000 cfm	(2) DWDI FC	252	96	129	6	24.1	44.5	44.5	58.0	46.9	35.9	8,650	10,250
	(2) DWDI BI	252	96	136	6	25.0	49.9	49.9	50.7	50.8	36.8	9,150	10,750
	(2) DWDI AF	252	96	136	6	25.0	49.9	49.9	50.7	50.8	36.8	9,150	10,750
CEL-ODO-132 66,000 cfm	(2) DWDI FC	276	96	136	6	25.0	49.9	49.9	62.7	50.8	36.8	9,275	11,050
	(2) DWDI BI	276	96	136	6	25.0	49.9	49.9	62.7	50.8	36.8	9,575	11,325
	(2) DWDI AF	276	96	136	6	25.0	49.9	49.9	62.7	50.8	36.8	9,575	11,325
CEL-ODO-154 77,000 cfm	(2) DWDI FC	276	108	129	6	24.1	44.5	44.5	70.0	46.9	35.9	9,400	11,250
	(2) DWDI BI	276	108	136	6	24.1	44.5	44.5	70.0	46.9	35.9	9,900	11,750
	(2) DWDI AF	276	108	136	6	36.0	57.2	42.6	52.3	56.9	46.7	12,200	14,050
CEL-ODO-168 84,000 cfm	(2) DWDI FC	300	108	131	6	24.1	44.5	44.5	82.0	46.9	35.9	10,300	12,300
	(2) DWDI BI	300	108	144	6	39.2	63.1	47.1	56.4	60.9	48.2	15,450	17,450
	(2) DWDI AF	300	108	144	6	39.2	63.1	47.1	56.4	60.9	48.2	15,725	17,750
CEL-ODO-182 91,000 cfm	(2) DWDI FC	324	110	136	6	25.0	49.9	49.9	86.7	50.8	38.8	11,425	13,600
	(2) DWDI BI	324	110	144	6	39.2	63.1	47.1	68.4	60.9	51.2	16,750	18,925
	(2) DWDI AF	324	110	144	6	39.2	63.1	47.1	68.4	60.9	51.2	16,775	18,950
CEL-ODO-202 100,800 cfm	(2) DWDI FC	342	114	137	6	25.0	49.9	49.9	95.7	50.8	38.8	12,300	14,625
	(2) DWDI BI	342	115	150	6	43.1	69.4	51.9	67.8	67.6	54.7	15,975	18,300
	(2) DWDI AF	342	115	150	6	43.1	69.4	51.9	67.8	67.6	54.7	16,150	18,500

* Unit height shown above includes the standing roof seam.
* Allow a minimum service clearance of 36" in front of all access doors and air inlet louvers.
* We recommend a minimum incoming water line pressure of 50 psi. Under no circumstances should the incoming water line pressure exceed 125psi.
* Standard Evaporative Media access panels require (2) persons to lift on units over 72" high. Consider upgrading to hinged access doors on tall units.
* Due to continued product development, all data is subject to change without notice. Full details will be provided with submittals.

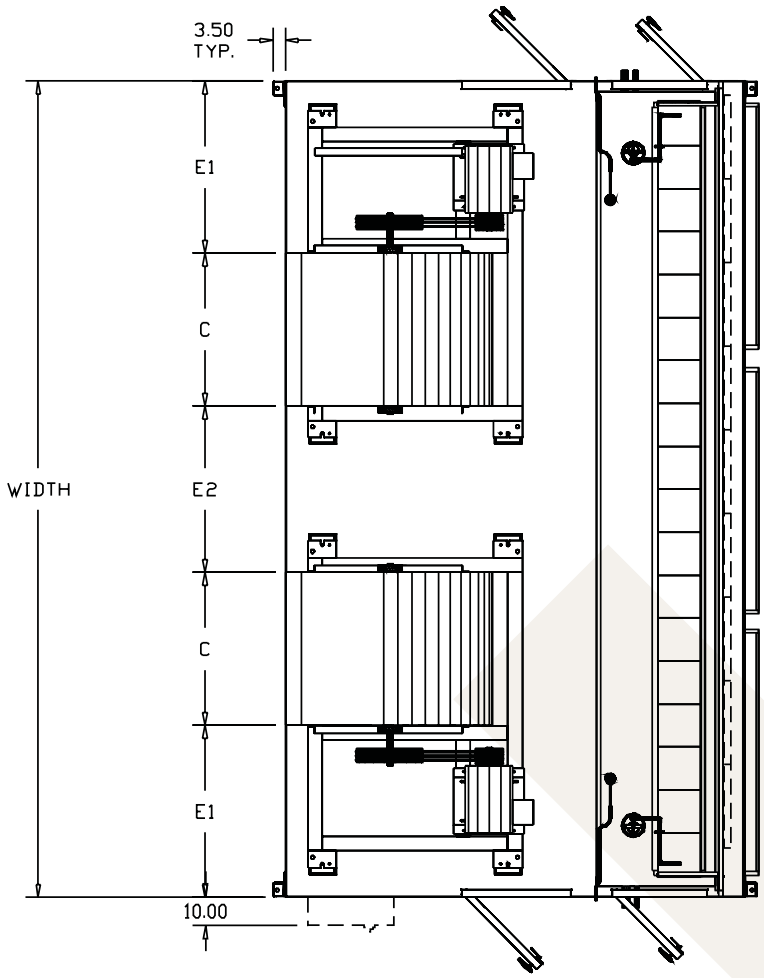

OUTSIDE CURB DIMENSIONS
Deduct 5.0" from the O.D. of the baseframe to obtain the O.D. of the roof curb. Please check submittal drawings to verify exact O.D. of the baseframe before the roof curb is built.

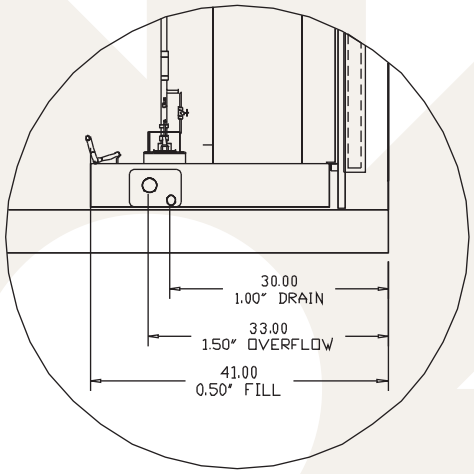

COPPER PLUMBING LOCATION DETAIL