UMP®

Fan-Air®

Evap Cooling with Heat

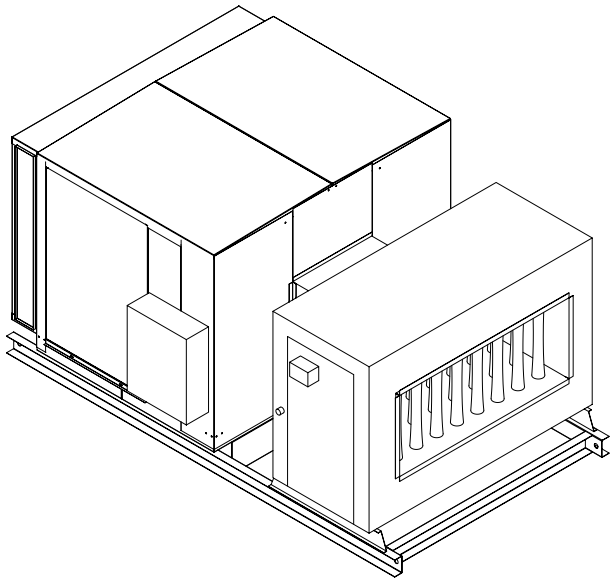

- ***800 Series*** *- With Heat*
  - *UMP-824S-WH*
  - *UMP-839S-WH*

- Side/End Discharge Only

Packaged Commercial / Industrial Evaporative Cooling

2,000 to 7,000 CFM with 100 to 400 MBH Power Vented Gas Fired Furnace

Features

- #409 stainless steel heat exchanger and burner / 20-60 °F or 20-100 °F temperature rise
- L.P. or Natural gas
- External static pressure range of 0.25" to 1.25" W.G.
- 2" Pre-filters
- Factory tested and shipped ready to operate, including factory wired components
- Single point power panel with pre-wired control packages
- ETL listed and labeled in accor dance with U.L.1995 standard
- Copper-wound, heavy duty ball bearing motors
- One high capacity pump provides complete media saturation
- Self-aligning, heavy duty, greasable, ball type fan bearings
- Lifting points incorporated in base frame
- Premium 12" thick CELdek cross fluted media for 90% evaporative efficiency
- Heavy gauge, hot dipped galvanized steel construction
- Epoxy powder base paint finish baked on at 375°
- Rugged cabinet assembly with double thick steel corners
- "Rain-Tight" pitched top construction (1/4"/12")
- Easily accessible external distributor clean-outs
- Side access media removal
- Adjustable motor sheave for air flow adjustment

Available Options

- 2-Stage or modulating furnace
- Standard or High Temp Furnaces
- 1 or 2-Speed blower motor
- U.L. 900 GLASdek media
- 8" thick evaporative media
- Distribution flush system
- Freeze protection
- Hinged access door
- Installation accessories
- Fused and non-fused disconnects
- Equipment supports
- Adjustable pitch roof jacks
- Downstairs controls

Resources Available for This Product

- Catalog By Mail
- Catalog Online

United Metal Products
1920 E Broadway Road Tempe, AZ 85282
T 480.968.9550
F 480.968.9555
www.unitedmetal.com

Manufacturer of Quality Air Moving Equipment

MADE in the USA

Information subject to change. Updates available online.
FanAir/UMP-800 Series WH (Mod)/PO/06-10-2016

UMP®

Fan-Air®

Evap Cooling with Heat

Table 1: UMP-824S-WH & UMP-839S-WH SINGLE SPEED PERFORMANCE (3-phase motors shown)

Model Number	CFM	Furnace		0.25" ESP						0.50" ESP						0.75" ESP					
		Input MBH *	Temp Rise F	Fan	BHP	HP	RPM	SHIP	OP.	Fan	BHP	HP	RPM	SHIP	OP.	Fan	BHP	HP	RPM	SHIP	OP.
UMP-824S-WH	2,000	100 - L	36.9	10	0.60	0.75	992	750	887	10	0.72	1	1092	752	889	10	0.83	1	1188	752	889
		150 - L	55.3	10	0.61	0.75	988	773	910	10	0.72	1	1088	775	912	10	0.83	1	1189	775	912
	3,000	100 - L	24.6	12	1.06	1.5	884	766	903	12	1.22	1.5	962	766	903	12	1.38	1.5	1036	766	903
		150 - L	36.9	12	1.05	1.5	878	789	926	12	1.21	1.5	956	789	926	12	1.37	1.5	1031	789	926
		200 - L	49.2	12	1.02	1.5	862	834	971	12	1.18	1.5	941	834	971	12	1.33	1.5	1016	834	971
		250 - H	*61.4*	*12*	*1.08*	*1.5*	*894*	*874*	*1,011*	*12*	*1.24*	*1.5*	*971*	*874*	*1,011*	*12*	*1.40*	*1.5*	*1045*	*874*	*1,011*
	4,000	150 - L	27.6	15	1.48	2	790	819	956	15	1.69	2	853	819	956	12	2.36	3	1129	814	951
		200 - L	36.9	15	1.40	2	766	864	1,001	15	1.62	2	831	864	1,001	15	1.84	2	893	864	1,001
		250 - L	46.1	15	1.40	2	766	904	1,041	15	1.62	2	831	904	1,041	15	1.84	2	893	904	1,041
		300 - L	55.3	15	1.40	2	766	904	1,041	15	1.62	2	831	904	1,041	15	1.84	2	893	904	1,041
UMP-839S-WH	5,000	150 - L	22.1	15	2.10	3	814	933	1,069	15	2.36	3	874	933	1,069	15	2.61	3	930	933	1,069
		200 - L	29.5	18	1.79	2	654	993	1,129	15	2.22	3	843	978	1,114	15	2.48	3	901	978	1,114
		250 - L	36.9	18	1.79	2	654	1,033	1,169	15	2.22	3	843	1,018	1,154	15	2.48	3	901	1,018	1,154
		300 - L	44.2	18	1.79	2	654	1,033	1,169	15	2.22	3	843	1,018	1,154	15	2.48	3	901	1,018	1,154
		350 - L	51.6	18	1.62	2	617	1,124	1,260	15	2.08	3	807	1,109	1,245	15	2.32	3	867	1,109	1,245
		400 - L	59.0	18	1.62	2	617	1,124	1,260	15	2.08	3	807	1,109	1,245	15	2.32	3	867	1,109	1,245
	6,000	200 - L	24.6	18	2.59	3	707	1,009	1,145	18	2.93	5	760	1,021	1,157	15	3.56	5	965	990	1,126
		250 - L	30.7	18	2.59	3	707	1,049	1,185	18	2.93	5	760	1,061	1,197	15	3.56	5	965	1,030	1,166
		300 - L	36.9	18	2.59	3	707	1,049	1,185	18	2.93	5	760	1,061	1,197	15	3.56	5	965	1,030	1,166
		350 - L	43.0	18	2.30	3	658	1,140	1,276	18	2.63	3	714	1,140	1,276	18	2.98	5	767	1,152	1,288
		400 - L	49.2	18	2.30	3	658	1,140	1,276	18	2.63	3	714	1,140	1,276	18	2.98	5	767	1,152	1,288
	7,000	200 - L	21.1	18	3.70	5	774	1,021	1,157	18	4.09	5	822	1,021	1,157	18	4.49	5	869	1,021	1,157
		250 - L	26.3	18	3.68	5	772	1,061	1,197	18	4.07	5	820	1,061	1,197	18	4.47	5	866	1,061	1,197
		300 - L	31.6	18	3.68	5	772	1,061	1,197	18	4.07	5	820	1,061	1,197	18	4.47	5	866	1,061	1,197
		350 - L	36.9	18	3.22	5	711	1,152	1,288	18	3.60	5	762	1,152	1,288	18	4.00	5	811	1,152	1,288
		400 - L	42.1	18	3.22	5	711	1,152	1,288	18	3.60	5	762	1,152	1,288	18	4.00	5	811	1,152	1,288

Model Number	CFM	Furnace		1.00" ESP						1.25" ESP					
		Input MBH *	Temp Rise F	Fan	BHP	HP	RPM	SHIP	OP.	Fan	BHP	HP	RPM	SHIP	OP.
UMP-824S-WH	2,000	100 - L	36.9	10	0.95	1.5	1280	756	893	x	x	x	x	x	x
		150 - L	55.3	10	0.94	1.5	1277	779	916	x	x	x	x	x	x
	3,000	100 - L	24.6	10	1.89	2	1406	765	902	10	2.04	3	1475	781	918
		150 - L	36.9	10	1.88	2	1401	788	925	10	2.03	3	1469	804	941
		200 - L	49.2	10	1.85	2	1387	833	970	10	2.00	3	1456	849	986
		250 - H	*61.4*	*10*	*1.91*	*2*	*1414*	*873*	*1,010*	*10*	*2.06*	*3*	*1483*	*889*	*1,026*
	4,000	150 - L	27.6	12	2.56	3	1189	814	951	12	2.76	3	1248	814	951
		200 - L	36.9	12	2.49	3	1168	859	996	12	2.69	3	1227	859	996
		250 - L	46.1	12	2.49	3	1168	899	1,036	12	2.69	3	1227	899	1,036
		300 - L	55.3	12	2.49	3	1168	899	1,036	12	2.69	3	1227	899	1,036
UMP-839S-WH	5,000	150 - L	22.1	15	2.87	3	983	933	1,069	12	4.05	5	1297	924	1,060
		200 - L	29.5	15	2.73	3	955	978	1,114	15	3.00	5	1008	990	1,126
		250 - L	36.9	15	2.73	3	955	1,018	1,154	15	3.00	5	1008	1,030	1,166
		300 - L	44.2	15	2.73	3	955	1,018	1,154	15	3.00	5	1008	1,030	1,166
		350 - L	51.6	15	2.59	3	923	1,109	1,245	15	2.84	3	977	1,109	1,245
		400 - L	59.0	15	2.59	3	923	1,109	1,245	15	2.84	3	977	1,109	1,245
	6,000	200 - L	24.6	15	3.87	5	1016	990	1,126	15	4.16	5	1064	990	1,126
		250 - L	30.7	15	3.87	5	1016	1,030	1,166	15	4.16	5	1064	1,030	1,166
		300 - L	36.9	15	3.87	5	1016	1,030	1,166	15	4.16	5	1064	1,030	1,166
		350 - L	43.0	15	3.61	5	972	1,121	1,257	15	3.90	5	1022	1,121	1,257
		400 - L	49.2	15	3.61	5	972	1,121	1,257	15	3.90	5	1022	1,121	1,257
	7,000	200 - L	21.1	15	5.06	7.5	1044	1,023	1,159	15	5.73	7.5	1135	1,023	1,159
		250 - L	26.3	15	5.04	7.5	1042	1,063	1,199	15	5.73	7.5	1134	1,063	1,199
		300 - L	31.6	15	5.04	7.5	1042	1,063	1,199	15	5.73	7.5	1134	1,063	1,199
		350 - L	36.9	18	4.39	5	857	1,152	1,288	15	5.31	7.5	1079	1,154	1,290
		400 - L	42.1	18	4.39	5	857	1,152	1,288	15	5.31	7.5	1079	1,154	1,290

Performance data is at 0ft elevation using stamp-faced louver, 2" filters (midpoint Pd), 90% efficient 12" deep evaporative cooling media and the furnace / fan / motor combination shown.

8" deep media, CELdek® or GLASdek® media, 2-speed motors and our usual accessories are also available; call for details.

Temperature rise is shown for unit installations at elevations between 0 and 2000 ft. (610m).

For unit installations in U.S.A. above 2000 ft. (610m), the unit input must be derated by 4% for each 1000 ft. above sea level (example: 2500ft = x0.9, 4500ft = x0.82, etc); refer to local codes, or in the absence of local codes, refer to the National Fuel Gas Code,ANSI Standard Z223.1-1996 (N.F.P.A. No. 54), or the latest edition of.

* Furnace Input MBH -L denotes standard temperature rise furnace.
* Furnace Input MBH -H denotes high temperature rise furnace.

Fan Data Table.

Fan	Max RPM	Max 1-Speed HP
18	1155	7.5
15	1328	7.5
12	1614	5
10	1934	5

Manufacturer of Quality Air Moving Equipment

MADE in the USA

Information subject to change. Updates available online.
FanAir/UMP-800S-WH (Mod)/Table 1/06-10-2016

Table 2: UMP-824S-WH 2-SPEED PERFORMANCE (3-phase 1-winding motors shown)

Model Number	CFM Hi/Lo	Furnace		0.25" ESP						0.50" ESP						0.75" ESP					
		Input MBH *	Temp Rise F	Fan	BHP Hi / Lo	HP Hi / Lo	RPM Hi / Lo	SHIP	OP.	Fan	BHP Hi / Lo	HP Hi / Lo	RPM Hi / Lo	SHIP	OP.	Fan	BHP Hi / Lo	HP Hi / Lo	RPM Hi / Lo	SHIP	OP.
UMP-824S-WH	2000 / 1000	100 - L	36.9	10	0.61	1	992	755	892	10	0.72	1	1092	755	892	10	0.83	1	1188	755	892
			73.7		0.08	0.25	496				0.24	0.25	546				0.27	0.25	594		
	3000 / 1500	100 - L	24.6	12	1.06	1.5	884	767	904	12	1.22	1.5	962	767	904	12	1.38	2	1036	773	910
			49.2		0.51	0.38	442				0.56	0.38	481				0.6	0.5	518		
		150 - L	36.9	12	1.05	1.5	878	790	927	12	1.21	1.5	956	790	927	12	1.37	2	1031	796	933
			73.7		0.33	0.38	439				0.38	0.38	478				0.52	0.5	516		
		200 - H	*49.2*	*12*	*1.08*	*1.5*	*894*	*835*	*972*	*12*	*1.24*	*1.5*	*971*	*835*	*972*	*12*	*1.4*	*2*	*1045*	*841*	*978*
			98.3		*0.14*	*0.38*	*447*				*0.16*	*0.38*	*486*				*0.18*	*0.5*	*523*		
	4000 / 2000	150 - L	27.6	15	1.48	2	790	817	954	15	1.69	2	853	817	954	12	2.36	3	1129	812	949
			55.3		0.49	0.5	395				0.68	0.5	427				0.74	0.75	565		
		200 - L	36.9	15	1.4	2	766	862	999	15	1.62	2	831	862	999	12	2.29	3	1107	857	994
			73.7		0.44	0.5	383				0.5	0.5	416				0.69	0.75	554		
		250 - H	*46.1*	*15*	*1.56*	*2*	*813*	*902*	*1,039*	*15*	*1.78*	*2*	*876*	*902*	*1,039*	*12*	*2.43*	*3*	*1151*	*897*	*1,034*
			92.2		*0.20*	*0.5*	*407*				*0.22*	*0.5*	*438*				*0.30*	*0.75*	*576*		

Model Number	CFM Hi/Lo	Furnace		1.00" ESP						1.25" ESP					
		Input MBH *	Temp Rise F	Fan	BHP Hi / Lo	HP Hi / Lo	RPM Hi / Lo	SHIP	OP.	Fan	BHP Hi / Lo	HP Hi / Lo	RPM Hi / Lo	SHIP	OP.
UMP-824S-WH	2000 / 1000	100 - L	36.9	10	0.95	1.5	1280	757	894	x	x	x	x	x	x
			73.7		0.27	0.38	640				x	x	x		
	3000 / 1500	100 - L	24.6	10	1.89	3	1406	779	916	10	2.04	3	1475	779	916
			49.2		0.65	0.75	703				0.69	0.75	738		
		150 - L	36.9	10	1.88	3	1401	802	939	10	2.04	3	1475	802	939
			73.7		0.57	0.75	701				0.61	0.75	738		
		200 - H	*49.2*	*10*	*1.91*	*3*	*1414*	*847*	*984*	*10*	*2.06*	*3*	*1483*	*847*	*984*
			98.3		*0.24*	*0.75*	*707*				*0.26*	*0.75*	*742*		
	4000 / 2000	150 - L	27.6	12	2.56	3	1189	812	949	12	2.76	3	1248	812	949
			55.3		0.80	0.75	595				0.86	0.75	624		
		200 - L	36.9	12	2.49	3	1168	857	994	12	2.69	3	1227	857	994
			73.7		0.75	0.75	584				0.81	0.75	614		
		250 - H	*46.1*	*12*	*2.64*	*3*	*1211*	*897*	*1,034*	*12*	*2.84*	*3*	*1269*	*897*	*1,034*
			92.2		*0.33*	*0.75*	*606*				*0.36*	*0.75*	*635*		

* Furnace Input MBH -L denotes standard temperature rise furnace.
* Furnace Input MBH -H denotes high temperature rise furnace.

Performance data is at 0ft elevation using stamp-faced louver, 2" filters (midpoint Pd), 90% efficient 12" deep evaporative cooling media and the furnace / fan / 2-speed motor combination shown.

8" deep media, CELdek® or GLASdek® media, 1-speed motors and our usual accessories are also available.

Temperature rise is shown for unit installations at elevations between 0 and 2000 ft. (610m).

For unit installations in U.S.A. above 2000 ft. (610m), the unit input must be derated by 4% for each 1000 ft. above sea level (example: 2500ft = x0.9, 4500ft = x0.82, etc); refer to local codes, or in the absence of local codes, refer to the National Fuel Gas Code,ANSI Standard Z223.1-1996 (N.F.P.A. No. 54), or the latest edition of.

Fan Data Table.

Fan	Max RPM	Max 2-Speed HP
18	1155	5
15	1328	5
12	1614	5
10	1934	5

Table 3: UMP-839S-WH 2-SPEED PERFORMANCE (3-phase 1-winding motors shown)

Model Number	CFM Hi/Lo	Furnace		0.25" ESP						0.50" ESP						0.75" ESP					
		Input MBH *	Temp Rise F	Fan	BHP Hi / Lo	HP Hi / Lo	RPM Hi / Lo	SHIP	OP.	Fan	BHP Hi / Lo	HP Hi / Lo	RPM Hi / Lo	SHIP	OP.	Fan	BHP Hi / Lo	HP Hi / Lo	RPM Hi / Lo	SHIP	OP.
UMP-839S-WH	5000 / 2500	150 - L	22.1	15	2.10	3	814	931	1,067	15	2.36	3	874	931	1,067	15	2.61	3	930	931	1,067
			44.2		0.73	0.75	407				0.80	0.75	437				1.15	0.75	465		
		200 - L	29.5	18	1.79	2	654	991	1,127	15	2.22	3	843	976	1,112	15	2.48	3	901	976	1,112
			59.0		0.63	0.5	327				0.70	0.75	422				0.78	0.75	451		
		250 - L	36.9	18	1.79	2	654	1,031	1,167	15	2.22	3	843	1,016	1,152	15	2.48	3	901	1,016	1,152
			73.7		0.63	0.5	327				0.70	0.75	422				0.78	0.75	451		
		300 - H	*44.2*	*15*	*2.24*	*3*	*848*	*1,016*	*1,152*	*15*	*2.49*	*3*	*905*	*1,016*	*1,152*	*15*	*2.75*	*3*	*960*	*1,016*	*1,152*
			88.5		*0.28*	*0.75*	*424*				*0.31*	*0.75*	*453*				*0.34*	*0.75*	*480*		
	6000 / 3000	200 - L	24.6	18	2.59	3	707	1,007	1,143	15	3.27	5	912	991	1,127	15	3.56	5	965	991	1,127
			49.2		0.96	0.75	354				1.05	1.3	456				1.13	1.3	483		
		250 - L	30.7	18	2.59	3	707	1,047	1,183	15	3.27	5	912	1,031	1,167	15	3.56	5	965	1,031	1,167
			61.4		0.96	0.75	354				1.05	1.3	456				1.13	1.3	483		
		300 - L	36.9	18	2.59	3	707	1,047	1,183	15	3.27	5	912	1,031	1,167	15	3.56	5	965	1,031	1,167
			73.7		0.96	0.75	354				1.05	1.3	456				1.13	1.3	483		
		350 - H	*43.0*	*15*	*3.46*	*5*	*946*	*1,122*	*1,258*	*15*	*3.76*	*5*	*998*	*1,122*	*1,258*	*15*	*4.06*	*5*	*1047*	*1,122*	*1,258*
			86.0		*0.43*	*0.75*	*473*				*0.47*	*1.3*	*499*				*0.51*	*1.3*	*524*		
		400 - H	*49.2*	*15*	*3.46*	*5*	*946*	*1,122*	*1,258*	*15*	*3.76*	*5*	*998*	*1,122*	*1,258*	*15*	*4.06*	*5*	*1047*	*1,122*	*1,258*
			98.3		*0.43*	*0.75*	*473*				*0.47*	*1.3*	*499*				*0.51*	*1.3*	*524*		
	7000 / 3500	200 - L	21.1	18	3.68	5	772	1,022	1,158	18	4.07	5	820	1,022	1,158	18	4.47	5	866	1,022	1,158
			42.1		1.24	1.3	386				1.36	1.3	410				1.36	1.3	433		
		250 - L	26.3	18	3.68	5	772	1,062	1,198	18	4.07	5	820	1,062	1,198	18	4.47	5	866	1,062	1,198
			52.7		1.24	1.3	386				1.36	1.3	410				1.36	1.3	433		
		300 - L	31.6	18	3.68	5	772	1,062	1,198	18	4.07	5	820	1,062	1,198	18	4.47	5	866	1,062	1,198
			63.2		1.24	1.3	386				1.36	1.3	410				1.36	1.3	433		
		350 - L	36.9	18	3.22	5	711	1,153	1,289	18	3.60	5	762	1,153	1,289	18	4.00	5	811	1,153	1,289
			73.7		0.97	1.3	356				1.08	1.3	381				1.19	1.3	406		
		400 - H	*42.1*	*18*	*4.53*	*5*	*873*	*1,153*	*1,289*	*x*	*x*	*x*	*x*	*x*	*x*	*x*	*x*	*x*	*x*	*x*	*x*
			84.3		*0.57*	*1.3*	*437*				*x*	*x*	*x*				*x*	*x*	*x*		

Model Number	CFM Hi/Lo	Furnace		1.00" ESP						1.25" ESP					
		Input MBH *	Temp Rise F	Fan	BHP Hi / Lo	HP Hi / Lo	RPM Hi / Lo	SHIP	OP.	Fan	BHP Hi / Lo	HP Hi / Lo	RPM Hi / Lo	SHIP	OP.
UMP-839S-WH	5000 / 2500	150 - L	22.1	15	2.87	5	983	946	1,082	12	4.05	5	1297	925	1,061
			44.2		1.22	1.3	492				1.29	1.3	649		
		200 - L	29.5	15	2.73	3	975	976	1,112	15	3.00	5	1008	991	1,127
			59.0		0.85	0.75	488				0.93	1.3	504		
		250 - L	36.9	15	2.73	3	975	1,016	1,152	15	3.00	5	1008	1,031	1,167
			73.7		0.85	0.75	488				0.93	1.3	504		
		300 - H	*44.2*	*15*	*3.02*	*5*	*1012*	*1,031*	*1,167*	*15*	*3.28*	*5*	*1062*	*1,031*	*1,167*
			88.5		*0.38*	*1.3*	*506*				*0.41*	*1.3*	*531*		
	6000 / 3000	200 - L	24.6	15	3.87	5	1016	991	1,127	15	4.16	5	1064	991	1,127
			49.2		1.22	1.3	508				1.31	1.3	532		
		250 - L	30.7	15	3.87	5	1016	1,031	1,167	15	4.16	5	1064	1,031	1,167
			61.4		1.22	1.3	508				1.31	1.3	532		
		300 - L	36.9	15	3.87	5	1016	1,031	1,167	15	4.16	5	1064	1,031	1,167
			73.7		1.22	1.3	508				1.31	1.3	532		
		350 - H	*43.0*	*15*	*4.36*	*5*	*1094*	*1,122*	*1,258*	*15*	*4.68*	*5*	*1140*	*1,122*	*1,258*
			86.0		*0.55*	*1.3*	*547*				*0.59*	*1.3*	*570*		
		400 - H	*49.2*	*15*	*4.36*	*5*	*1094*	*1,122*	*1,258*	*15*	*4.68*	*5*	*1140*	*1,122*	*1,258*
			98.3		*0.55*	*1.3*	*547*				*0.59*	*1.3*	*570*		
	7000 / 3500	200 - L	21.1	18	4.87	5	910	1,022	1,158	x	x	x	x	x	x
			42.1		1.36	1.3	455				x	x	x		
		250 - L	26.3	18	4.87	5	910	1,062	1,198	x	x	x	x	x	x
			52.7		1.36	1.3	455				x	x	x		
		300 - L	31.6	18	4.87	5	910	1,062	1,198	x	x	x	x	x	x
			63.2		1.36	1.3	455				x	x	x		
		350 - L	36.9	18	4.39	5	857	1,153	1,289	x	x	x	x	x	x
			73.7		1.30	1.3	429				x	x	x		
		400 - H	*42.1*	*x*	*x*	*x*	*x*	*x*	*x*	*x*	*x*	*x*	*x*	*x*	*x*
			84.3		*x*	*x*	*x*				*x*	*x*	*x*		

Performance data is at 0ft elevation using stamp-faced louver, 2" filters (midpoint Pd), 90% efficient 12" deep evaporative cooling media and the furnace / fan / 2-speed motor combination shown.

8" deep media, CELdek® or GLASdek® media, 1-speed motors and our usual accessories are also available.

Temperature rise is shown for unit installations at elevations between 0 and 2000 ft. (610m).

For unit installations in U.S.A. above 2000 ft. (610m), the unit input must be derated by 4% for each 1000 ft. above sea level (example: 2500ft = x0.9, 4500ft = x0.82, etc); refer to local codes, or in the absence of local codes, refer to the National Fuel Gas Code,ANSI Standard Z223.1-1996 (N.F.P.A. No. 54), or the latest edition of.

Fan Data Table.

Fan	Max RPM	Max 2-Speed HP
18	1155	5
15	1328	5
12	1614	5
10	1934	5

* Furnace Input MBH -L denotes standard temperature rise furnace.
* Furnace Input MBH -H denotes high temperature rise furnace.

UMP®

Fan-Air®

Evap Cooling with Heat

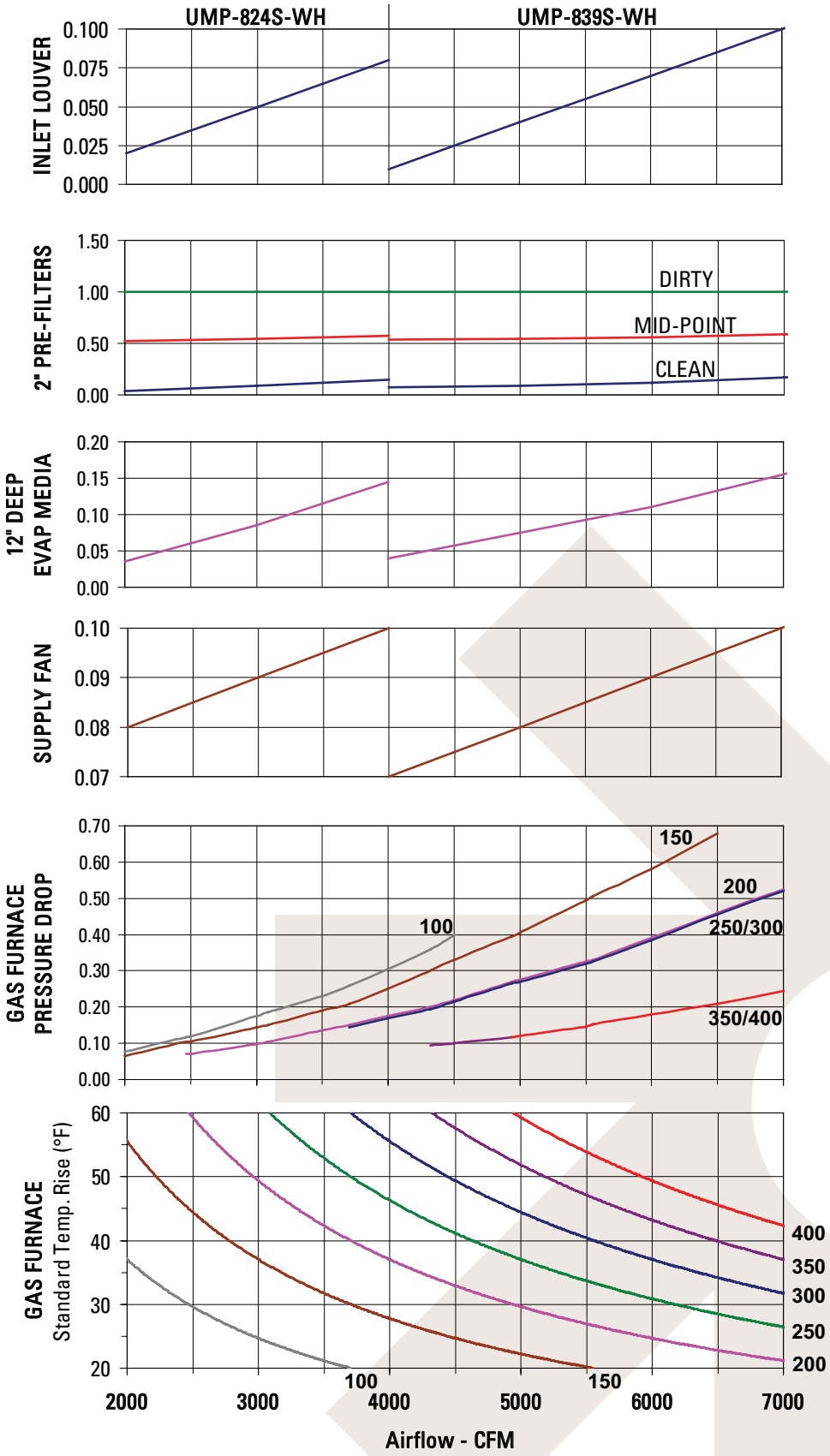

Standard Temperature-Rise Furnaces (20-60 °F)

Use these charts to determine the system Total Static Pressure (TSP) of the air handling system if the standard unit configuration in Table 1 does not apply.

United Metal Products will then select the best fan / motor combination for that application.

PROJECT INFORMATION

NAME: _____

LOCATION: _____

ALTITUDE: _____

AIRFLOW: _____ CFM

TEMP. RISE: _____ °F

OR

HEAT INPUT: _____ MBH

STATIC PRESSURE ANALYSIS:

INLET LOUVER: _____ "WG

FILTERS: _____ "WG

EVAP. MEDIA: _____ "WG

SUPPLY FAN: _____ "WG

FURNACE: _____ "WG

ESP.: _____ "WG

TSP.: "WG

Formula

To properly select a unit, two of the three following items must be known:

- Temperature Rise (TR) required
- Cubic Feet per Minute (CFM) required
- Output (BTU/H OUT) required

From any two of these items the third item can be determined, as well as the Input (BTU/H IN) required as follows:

(The value 1.085 represents a constant.)

- TR = BTU/H Out / (1.085 x CFM)
- CFM = BTU/H / (1.085 x TR)
- BTU/H Out = (CFM x 1.085) x TR
- BTU/H In = BTU/H Out / Efficiency .80 or .79

Manufacturer of Quality Air Moving Equipment

MADE in the USA

Information subject to change. Updates available online.

UMP®

Fan-Air®

Evap Cooling with Heat

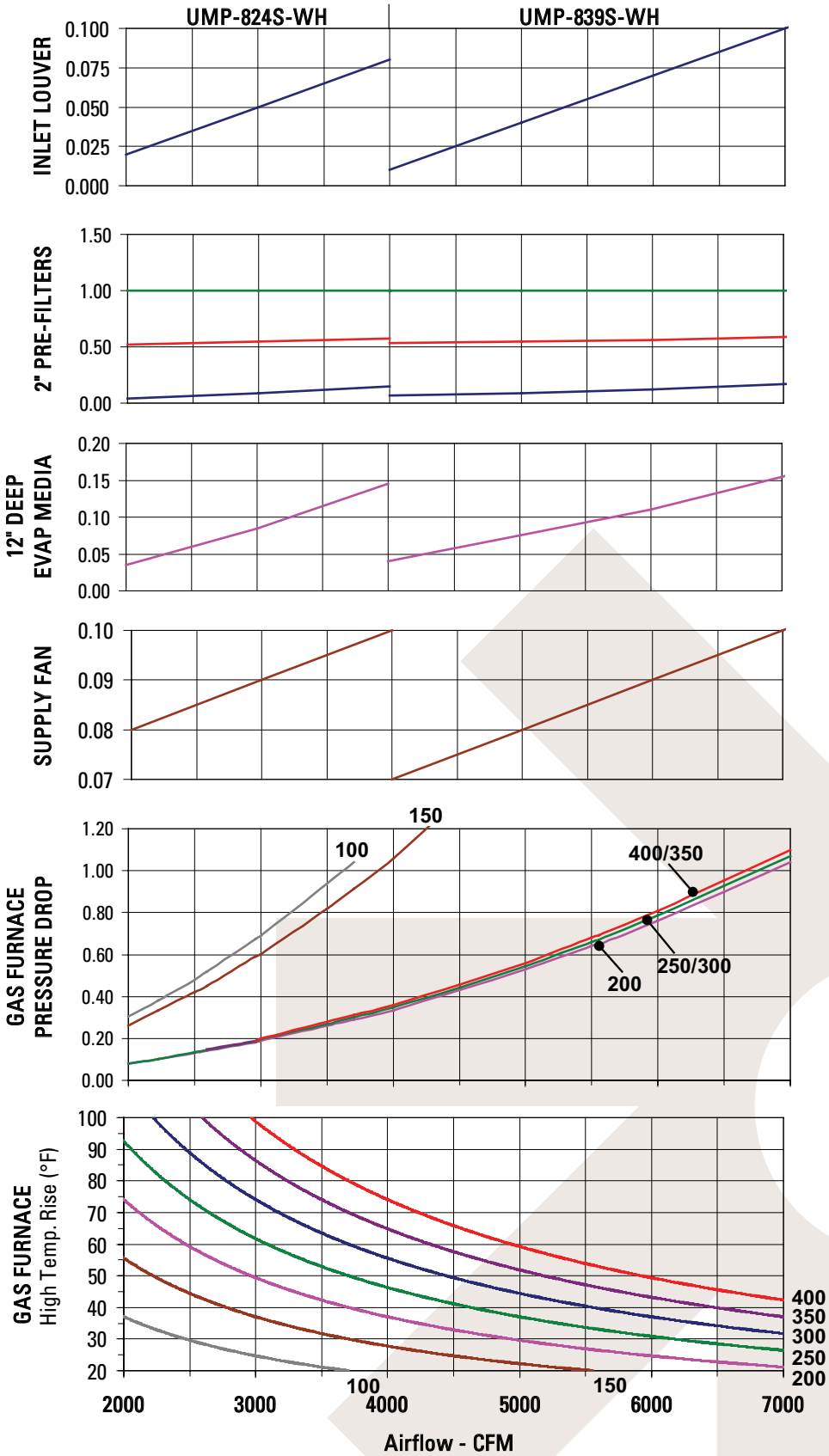

High Temperature-Rise Furnaces (20-100 °F)

Use these charts to determine the system Total Static Pressure (TSP) of the air handling system if the standard unit configuration in Tables 2 and 3 do not apply.

United Metal Products will then select the best fan / motor combination for that application.

PROJECT INFORMATION

NAME: _____

LOCATION: _____

ALTITUDE: _____

AIRFLOW: _____ CFM

TEMP. RISE: _____ °F

OR

HEAT INPUT: _____ MBH

STATIC PRESSURE ANALYSIS:

INLET LOUVER: _____ "WG

FILTERS: _____ "WG

EVAP. MEDIA: _____ "WG

SUPPLY FAN: _____ "WG

FURNACE: _____ "WG

ESP.: _____ "WG

TSP.: "WG

Formula

To properly select a unit, two of the three following items must be known:

- Temperature Rise (TR) required
- Cubic Feet per Minute (CFM) required
- Output (BTU/H OUT) required

From any two of these items the third item can be determined, as well as the Input (BTU/H IN) required as follows:

(The value 1.085 represents a constant.)

- TR = BTU/H Out / (1.085 x CFM)
- CFM = BTU/H / (1.085 x TR)
- BTU/H Out = (CFM x 1.085) x TR
- BTU/H In = BTU/H Out / Efficiency .80 or .79

Manufacturer of Quality Air Moving Equipment

MADE in the USA

Information subject to change. Updates available online.

UMP®

Fan-Air®
Evap Cooling with Heat

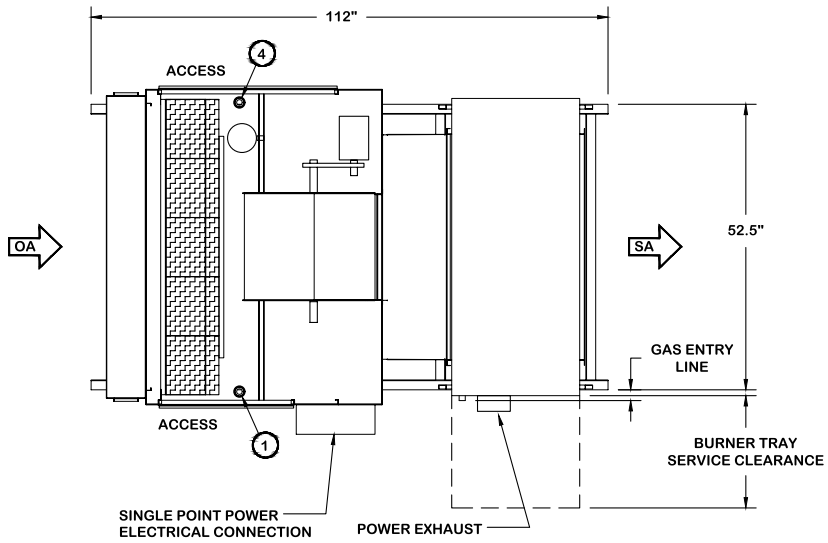

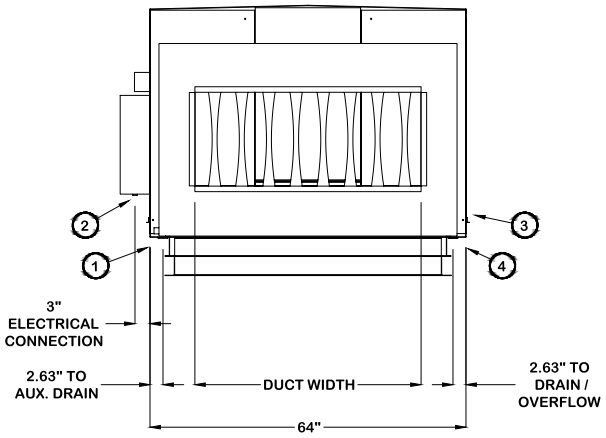

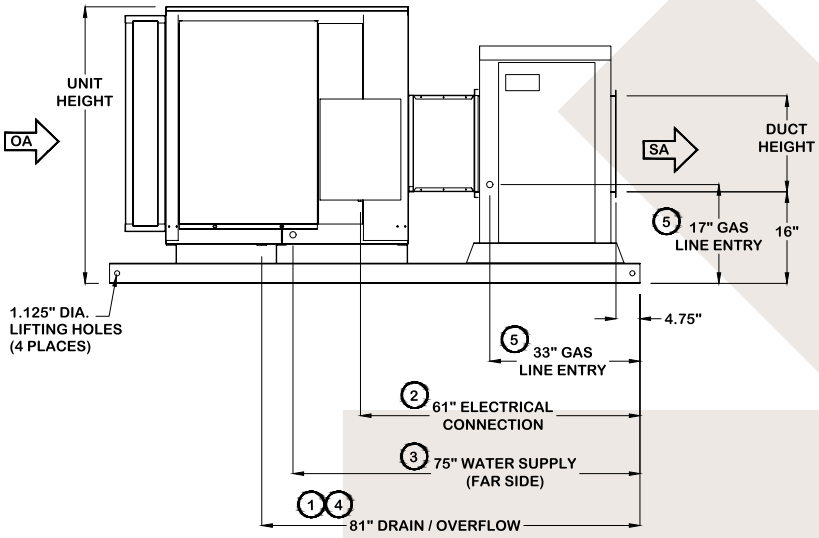

① **Auxiliary Drain** - (3/4" male hose thread) - Consult factory for special applications.

A. Distributor Flush System - may be externally plumbed (by others). The installer has the option to run the flush line internally to the overflow tube or secure the flush line back into the sump. If the installer chooses to run the flush line internally to the auxiliary drain then it will be necessary to externally plumb the auxiliary drain.

B. Freeze Kit - must be externally plumbed (by others) when utilizing optional Freeze kit. Note: when the optional Freeze kit is used in conjunction with the optional Flush kit, the flush line will be factory mounted back into the sump only.

② **Electrical Service** - 7/8" entrance for 1/2" conduit.

③ **Float** - 3/8" compression fitting connection made inside unit. Minimum 15 p.s.i. Water pressure is recommended to deliver the volume needed to meet the high summer evaporation and bleed requirements. Do not exceed 125 p.s.i.

④ **Primary Drain / Overflow** - (3/4" male hose thread) must be externally plumbed (by others).

⑤ **Gas** - See gas connection size below. Connection made inside furnace. National gas pressure: 6-7" W.C. (14" W.C. Max). Liquid propane inlet pressure: 11-14" W.C. (14" W.C. Max).

Fan Motor Electrical Specifications (NEC 2010)

Motor HP	Single Speed		2-Speed	
	115/208/230 Volt 1-Phase Amps	208/230/460 Volt 3-Phase Amps	High Speed 115/230 Volt 1-Phase Amps	High Speed 208/230/460 Volt 3-Phase Amps
0.75	13.8 / 7.6 / 6.9	3.5 / 3.2 / 1.6	--	--
1	16.0 / 8.8 / 8.0	4.6 / 4.2 / 2.1	Available by special order.	4.6 / 4.2 / 2.1
1.5	20.0 / 11.0 / 10.0	6.6 / 6.0 / 3.0		6.6 / 6.0 / 3.0
2	24.0 / 13.2 / 12.0	7.5 / 6.8 / 3.4	--	7.5 / 6.8 / 3.4
3	-- / 18.7 / 17.0	10.6 / 9.6 / 4.8	--	10.6 / 9.6 / 4.8
5	--	14.7 / 15.2 / 7.6	--	16.7 / 15.2 / 7.6
7.5	--	24.2 / 22.0 / 11.0	--	--

Notes:
* Low speed HP and amp draw for 2-Speed motors available on request.
* Thermostats, equipment supports and roof jacks are available.
* Contact United Metal Products for more information.

Furnace Specifications

MBH	Gas Line Entry			Burner Tray Service Clearance	Supply Duct Width x Height	Min CFM Std / High Temp Rise Furnace
	Gas Conn. (W)	Inlet Size (Nat)	Inlet Size (LP)			
100	-9.0	0.50	0.5	11.0	18 x 19	1,235 / 714
150	-7.0	0.50	0.5	18.0	22 x 19	1,852 / 1,111
200	-6.0	0.50	0.5	21.0	24 x 23	2,469 / 1,481
250	-4.0	0.75	0.75	26.0	27 x 23	3,086 / 1,852
300	-4.0	0.75	0.75	26.0	27 x 23	3,704 / 2,222
350	+1.5	0.75	0.75	43.0	38.6 x 23	4,321 / 2,593
400	+1.5	0.75	0.75	43.0	38.6 x 23	4,938 / 2,963

Evaporative Cooler Specifications

Model #	Unit Height	Filters	Evaporative Media	Pump	
		(Qty) - Depth x Width x Height	(Qty) - Depth x Width x Height	GPM @ 5' Head	Volt / Phase 115 1-Ph Amps
UMP-824S-WH	41	(3) - 2" x 20" x 24"	(5) - 12" x 12" x 24"	7.7	1.1
UMP-839S-WH	56	(6) - 2" x 20" x 20"	(5) - 12" x 12" x 39"	13.7	2.3

Manufacturer of Quality Air Moving Equipment

MADE in the USA

Information subject to change. Updates available online.
FanAir/UMP-800S-WH (Mod)/Dimensions/06-10-2016

UMP®

Fan-Air®
Evap Cooling with Heat

UMP-800S-WH Series: Adjustable Pitch Roof Jack for Supply Air Duct

(duct between the furnace and roof jack is supplied by others to suit site conditions)

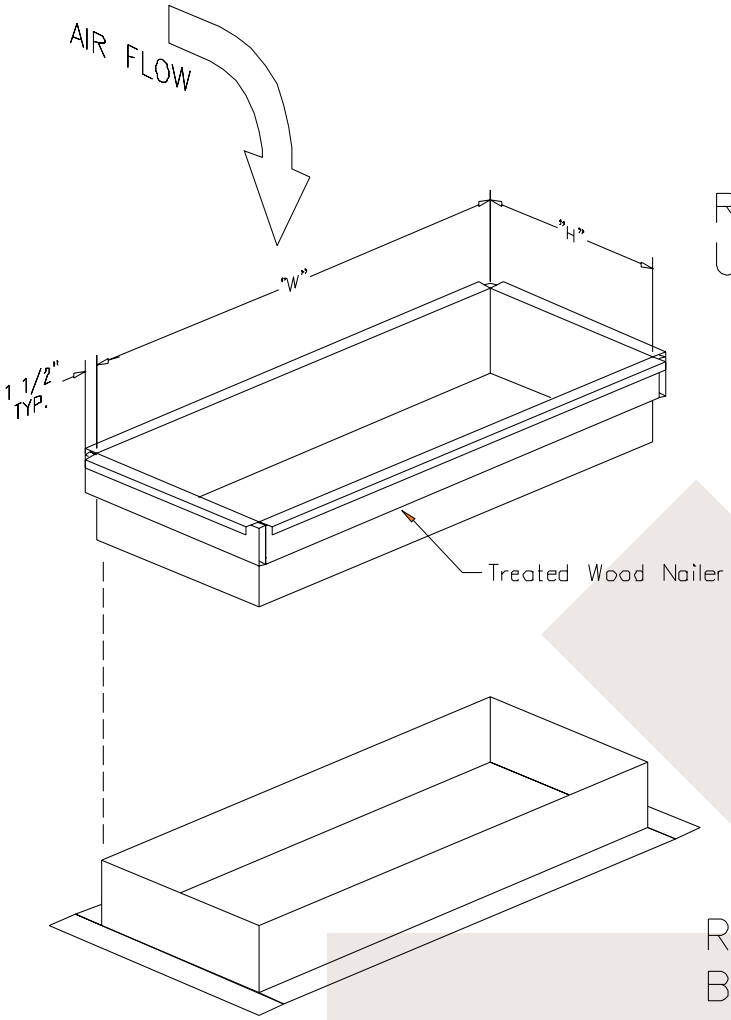

Roof Jack
Upper Assembly

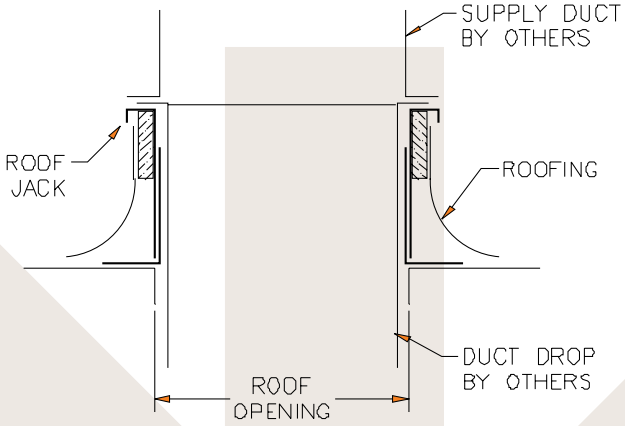

Elevation View

Roof Jack
Base Assembly

Adjustment Range	
Curb Height	Pitch
8"	1.5" per 12" max.

Jack Material
18ga G90 Galv. (unless otherwise specified)

Roof Jack Size and Roof Opening Size					
Part #	Furnace MBH	"W" nominal	"H" nominal	Weight (lbs)	Recommended Roof Opening Size
82343	100	18.0	19.0	37	H x W
82344	150	22.0	19.0	40	H x W
82345	200	24.0	23.0	43	H x W
82346	250	27.0	23.0	47	H x W
82346	300	27.0	23.0	47	H x W
82347	350	38.6	23.0	58	H x W
82347	400	38.6	23.0	56	H x W

Manufacturer of Quality Air Moving Equipment

MADE in the USA

Information subject to change. Updates available online.
FanAir/UMP-800S-WH (Mod)/Jack Layout/06-10-2016

UMP®

Fan-Air®

Evap Cooling with Heat

UMP-800S-WH Series: Typical Installation and CHV-1™ Control Package

CHV-1™ Control Package

* MUA CONTROL PANEL
* POWER VENTILATOR CONTROL PANEL
* RSK-2 DOWN STAIRS CONTROL SWITCH

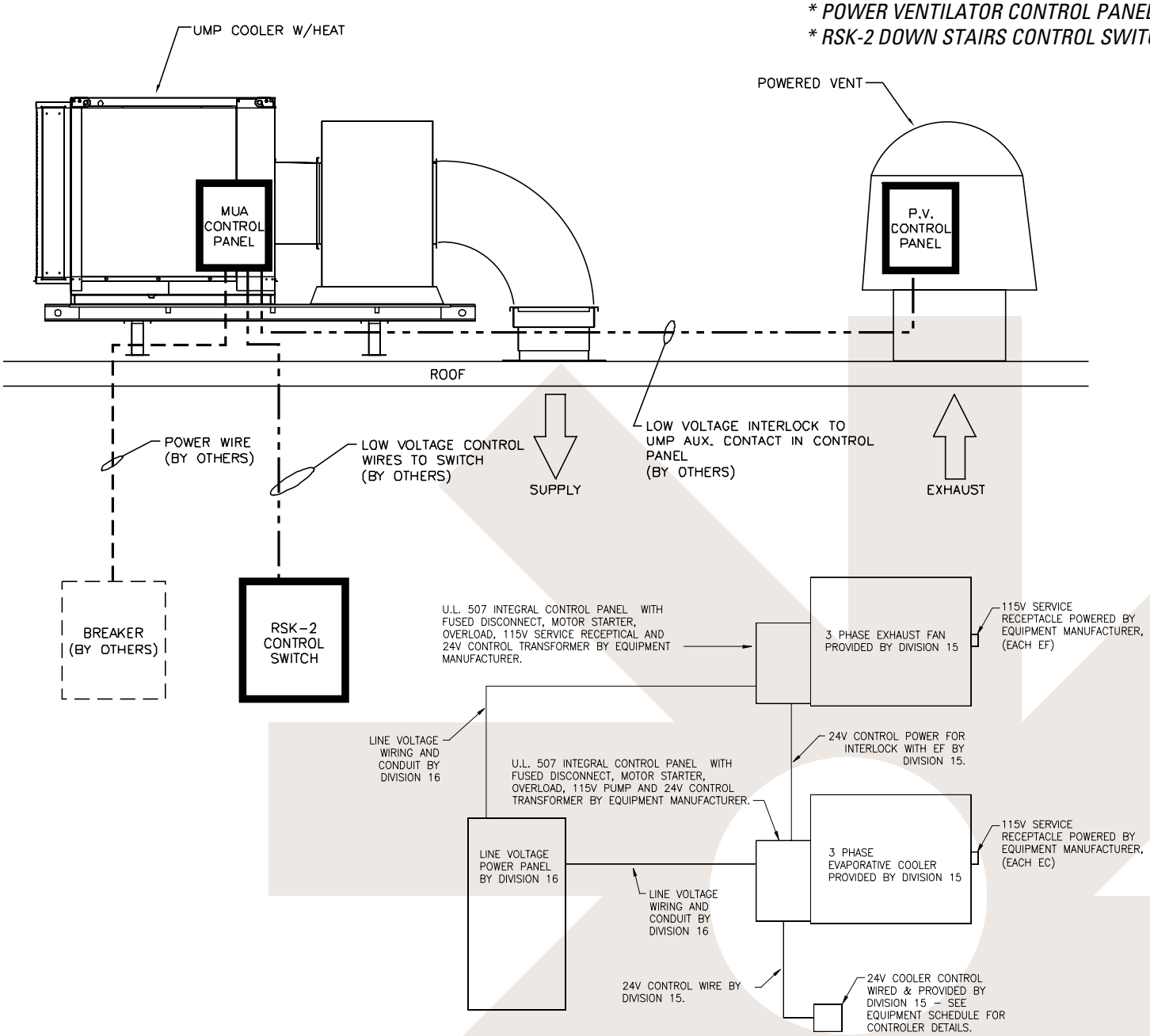

United Metal Products is able to provide a complete CHV-1 control package including the MUA control panel, the exhaust ventilator control panel and the RSK-2 downstairs control switch.

Many methods and practices for installing an evaporative cooler with furnace exist. United Metal Products adjustable pitch equipment supports and jacks – shown above are one way.

See separate page literature for more information on these products.

Full perimeter curbs complete with duct penetrations are also available from United Metal Products to meet specific site requirements - contact us with your requirements and we will be happy to work with you.

United Metal Products is an Equipment Manufacturing Entity. We do not claim to be expert on equipment installation in the field. Steps must be taken by the installing contractor to assure the installation is approved by the local governing construction codes, and poses no risks

Manufacturer of Quality Air Moving Equipment

MADE in the USA

Information subject to change. Updates available online.
FanAir/UMP-800S-WH (Mod)/Typical Installation/06-10-2016